Detector Switches

Specifications:

Contact rating:	5V DC, 10 mA (DTS 11: 5 mA)
Contact resistance:	< 0.5 Ω (DTS 11: < 1 Ω)
Insulation resistance:	> 100 MΩ
Dielectric strength:	100 V, 50 Hz for the duration of 1 minute (DTS 11: 250 V)
Operating temperature:	–20 °C to +60 °C (DTS 11: –40 °C to +80 °C)
Operating force:	< 0.35 N
Mechanical life:	minimum 1 000 000 operations (DTS 11: 100 000)
Material:	Contacts: phosphor-bronze, silver-plated
	Terminals: copper alloy, silver-plated
	Case and actuator: PPA, LPC (DTS 11: LCP, HTN)

Models: Switching functions

DTS 302 C P R T-1 mom – off – mom

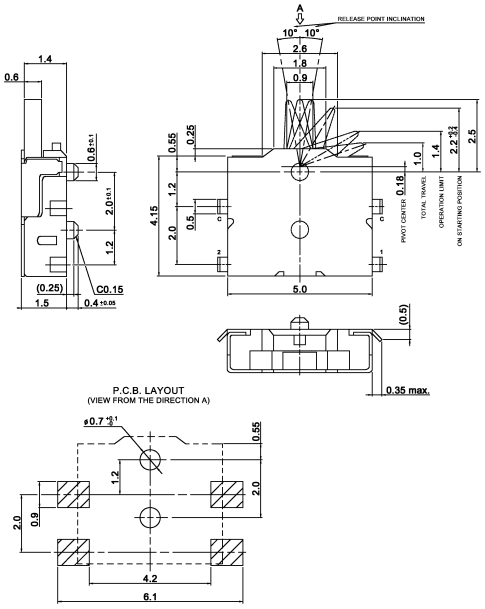

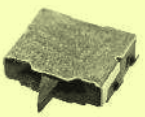

DTS 11 LCP 0.7-T on – (mom)

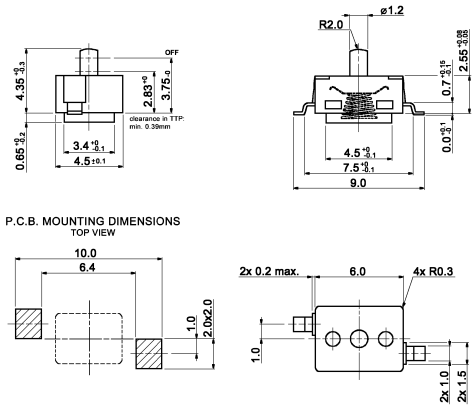

Packing: 3000 pcs/reel (DTS 11: 1500 pcs/reel)